ZHEJIANG BENYI NEW ENERGY CO.,LTD.
WENZHOU BRIDGE INDUSTRIAL ZONE, BEIBAIXIANG TOWN, ZHEJIANG, CHINA
TEL: +86-577-5717 7008 FAX: +86-577-5717 7007
VERSION: 20230919
benyi@zjbeny.com
www.beny.com
This catalogue has been printed on ecological paper.
Zhejiang Benyi New Energy Co.,Ltd.all rights reserved.
If the models and specification in this product catalogue is changed due to the change of products, we wil not inform.

OCPP EV Charger Installation Manual

WWW.BENY.COM

G R E E N S M A R T

CONTENTS

1. Safety Information 01

- Important safety instructions P-01

2. Product Introduction 03

- 2.1. Product Appearance P-03
- 2.2. Parameter table P-04
- 2.3. Product Features P-05
- 2.4. Protection Functions P-06

3. Installation Instructions 07

- 3.1. Installation Considerations P-08
- 3.2. Minimum Installation Requirements P-08
- 3.3. Position P-09
- 3.4. Height P-09
- 3.5. Power Supply P-09
- 3.6. Accessories List P-10
- 3.7. Installation Step P-11

4. Operating instructions 16

- 4.1. Buttons On harger P-16
- 4.2. Buzzer P-17
- 4.3. Dynamic Load Balancing Kit P-17
- 4.4. LED Lights Display P-18
- 4.5. Firmware Update via OCPP Server P-22

5. Warranty 23

6. Manufacturer self-declaration 23

1. Safety Information

Important Safety Instructions

This document contains important instructions and warnings that must be followed when installing and maintaining the EV Charger.

⚠ Warning

- ⚠ Read this entire mandatory document before installing or using the EV charger.
- ⚠ This device should be supervised when used around children.
- ⚠ The BCP series EV Charger must be grounded through a permanent wiring system or an equipment grounding conductor.
- ⚠ Do not install or use the EV Charger near flammable, explosive, harsh, or combustible materials, chemicals, or vapors.
- ⚠ Use the EV Charger only within the specified operating parameters.
- ⚠ Never spray water or any other liquid directly at the wall mounted EV Charger. Never spray any liquid onto the charger handle or submerge the charger handle in liquid. Store the charger handle above the ground to prevent unnecessary exposure to contamination or moisture.
- ⚠ Stop using and do not use the EV Charger if it is defective, appears cracked, frayed, broken, or otherwise damaged, or fails to operate, or continue operation.
- ⚠ Do not attempt to disassemble, repair, tamper with, or modify the EV Charger. The EV Charger is not user serviceable. Contact us for any repairs or modification.
- ⚠ Transporting the EV Charger, handle with care. Do not subject it to strong force or impact or pull, twist, tangle, drag, or step on the EV Charger, to prevent damage to it or any components.
- ⚠ Do not touch the EV Charger’s end terminals with sharp metallic objects, such as wire, tools, or needles.
- ⚠ Do not forcefully fold or apply pressure to any part of the EV Charger or damage it with sharp objects.

1. Safety Information

- ⚠ Do not insert foreign objects into any part of the EV Charger.
- ⚠ Use of the EV Charger may affect or impair the operation of any medical or implantable electronic devices, such as an implantable cardiac pacemaker or an implantable cardioverter defibrillator. Check with your electronic device manufacturer concerning the effects that charging may have on such electronic devices before using the EV Charger.

Cautions

- ⚠ Do not use private power generators as a power source for charging.
- ⚠ Incorrect installation and testing of the EV Charger could potentially damage either the vehicle's Battery and/or the EV Charger itself. Any resulting damage is excluded from New Vehicle Limited Warranty and the EV Charger Limited Warranty.
- ⚠ Do not operate the EV Charger in temperatures outside its operating range of -25℃ to +55℃.
- ⚠ That adaptors or conversion adapters are not addowed to be used.
- ⚠ That cord extension sets are not allowed to be used.

Notes

- Ensure that the EV Charger's charging cable is positioned so it will not bestepped on, driven over, tripped on, or subjected to damage or stress.
- Do not use cleaning solvents to clean any of the EV Charger's components.The outside of the EV Charger, the charging cable, and the connector end of the charging cable should be periodically wiped with a clean dry cloth to remove accumulation of dirt and dust.
- Be careful not to damage the circuit board when removing the power entry knock-out.

2. Product Introduction

2.1. Product Appearance

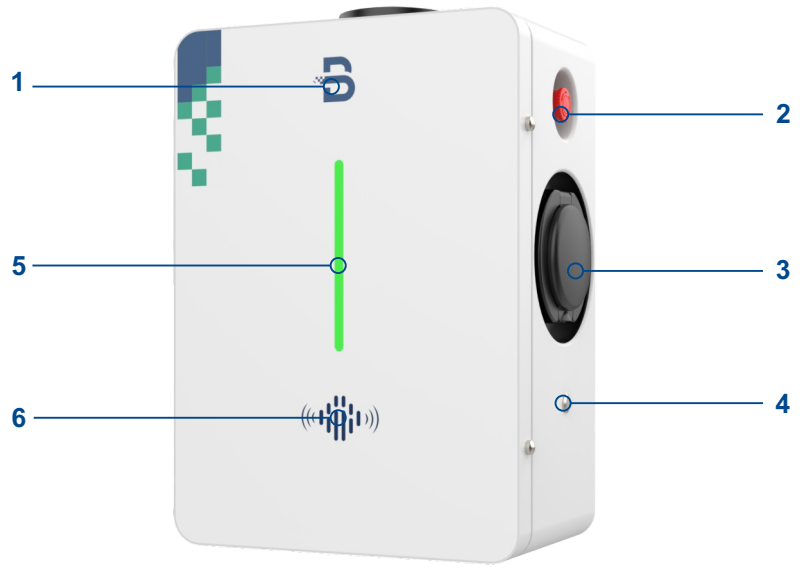

1	Logo
2	Emergency Button Switch (When the button is pressed, the EV Charger will stop, then rotate the button pop-up reset.)
3	Type 2 Socket/Type 2 Socket with shutter
4	Electric leakage test button (For WPS connection,and leakage test.)
5	LED light
6	RFID

2. Product Introduction

2.2. Parameter table

Wallbox Models	BCPM-B2N-P	BCPM-BT2N-P
Maximum Power	7.4KW	22KW
Input voltage/Output voltage	1-PHASE AC230±15% L、N、PE	3-PHASE AC400±15%, L3、L2、L1、N、PE
Input frequency	50Hz/60Hz	
Tethered/Socket	T2/T2S	T2/T2S
Meter	Metering Chip	
Display	LED Lights	
Frequency	50Hz/60Hz	
Rate Charging Current	6-32A	
Cable Length	5M	
Standby Power Consumption	2W	
Operating Temperature	-30℃ ~ 55℃	
Storage temperature	-40℃-85℃	
Operating Humidity	5%-95%	
IP Protection	IP65	
Safety Protection	Leakage Protection、Over Current Protection、Ground Protection、Over Voltage Protection、Under Voltage Protection、Contactor Adhesion Protection、Neutral and Live Wire Reverse Connection Protection、Over Temperature Protection、CP Signal Abnormal Protection、Lightning Protection	
Operating Altitude	<2000M	
Charger Dimension	Height:360mm Width:278mm Depth:152mm	
Gross Weight	9.3KG	
Leakage Detection	TYPE A+DC6mA leakage sensor built-in	

2.3. Features

- Commectivity: Ethernet and Wi-Fi connection
- Opened Up Detection: Once the charger is opened up, the charger stop charging and make alarm.
- App Remotes: Remotely control the charger and have the charging history.
- Full Protection: For people's safety
- IP65 level protection
- Leakage Protection: with Type A sensor + DC6mA sensor
- Temperature Protection: Stop operating once over temperature.
- WPS WIFI Connection: Faster connection
- Operating Temperature: -30℃~+55℃

2.4. Protection Functions

With full protection to avoid all kinds of charging safety hazards, it will automatic power off after the vehicle is fully charged, to protect the car battery and prolong the working life.

Leakage Protection	Over Current Protection	Ground Protection	Over Voltage Protection	Under Voltage Protection
Contactor Adhesion Protection	Neutral and Live Wire Reverse Connection Protection	Over Temperature Protection	CP Signal Abnormal Protection	Lightning Protection

3. Installation Instructions

⚠ Warning

- ⚠ Normally, the earth wire should be properly connected, otherwise the EV charger will not work.
- ⚠ For situation where there is no earth connection, in order to enable the EV Charger to operate, it can be set via APP to turn off the earth detection and it will work, but it will reduce to the leakage protection safety level.
- ⚠ This BCP series AC EV charger must be grounded via a permanent electrical system or equipment grounding conductor.
- ⚠ Before installing an AC EV charger, please confirm the type of grid connection available. If you are unsure of the type of connection available on the service panel, please consult an electrician or contact ZJBENY for assistance.
- ⚠ Note:Please consult your local electrician or refer to your local code in order to choose the proper wire for the AC EV charger current.

3. Installation Instructions

3.1. Installation Considerations

- Note: Throughout the manual, "conduit" is used as the standard term for the protective tubing that houses the service wiring. In regions where conduit is not used (Europe for example), a cable comprised of service wiring enclosed in a protective jacket may be substituted for conduit if allowed by local regulations.
- Here are some additional guidelines
- Conduit needs to be metal and flame retardant.
- Use an appropriate circuit breaker.
- To keep the housing weatherproof,use cable glands.

3.2. Minimum Installation Requirements

Installation of the wall charger requires that you:

- Calculate the existing electrical load to determine the maximum operating current.
- Calculate the distance to ensure minimal voltage drop.
- Obtain any necessary permits from the local authority that has jurisdiction and confirm that the follow-up inspection has been scheduled by an electrician after the installation is complete.
- Use only copper conductors.
- Use copper wire that meets the specifications of local wiring regulations. The selected cable must be capable of withstanding continuous oads of up to 40A at all times. The selected circuit protection device must incorporate an appropriate wall-mounted residual current device (RCD) and corresponding electrical load over current protection.

3.3. Position

- Ensure that the parking position is within range of the charging cable.
- There is enough clearance for the charging cable to wrap around and the charging handle can be comfortably positioned on the side of base.
- If installed in an enclosed garage, choose to install on the side of the EV charger slot.
- For outdoor installations, waterproof protection is recommended but not mandatory.
- Install in a well-ventilated space. Avoid installation in enclosed boxes or close to high power appliances.

3.4. Height

- Maximum height (indoor and outdoor): 60 inches (1.5 m)
- Recommended height: 47 in (~1.2 m)
- Minimum outdoor height: 24 in (0.6 m)
- Minimum interior height: 18 inches (0.45 m)

3.5. Power Supply

230V single-phase power supply

- For single-phase EV charger, a single-phase wire (L), Neutral and earth wire must be connected. The phase voltage between the Line and Neutral wires should be 230V.

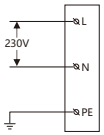

- For 3-phase EV charger, connect the single phase wire (L1), the neutral wire and the earth wire do not connect the other phase wires (L2 or L3). The phase voltage between the line and neutral wires should be 230V.

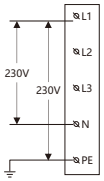

400V three-phase power supply with neutral line

- If three phases are applied, all three phases (L1, L2 and L3) and the neutral line should be connected to each other and the voltage of each phase to the neutral line should be 230V.

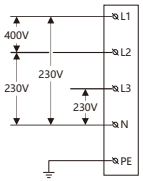

3.6. Accessories List

①

EV charger

X1

②

Mounting braket

X1

③

DLB box (optional)

X1

④

RFID card (optional)

X2

⑤

M32*1.5 cable gland

X1

⑥

M6*10 screws

X2

⑦

M4*10

X1

⑧

8*40 flat head screws and anchorings

X4

⑨

Position template

X1

Note: Card type supported by RFID: RF card ISO14443 Type A, MIFARE® ONE (MF1) card, with the read-write frequency of 13.56MHz±7K.

3.7. Installation Step

3.7.1. Step-by-step Installation Instructions (bottom entry wiring)

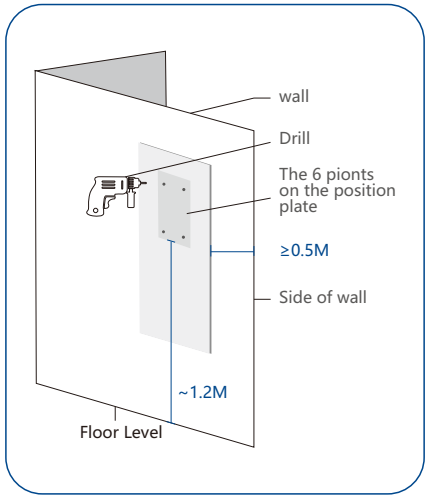

Step 1

Position

The bottom of the ⑨positioning plate is 1.2 m away (recommended), if the EV charger is installed close to the edge of the wall, the positioning plate should be more than 0.5 m away from the edge of the wall.

Drilling pilot holes

Drilling the holes according to the instruction on the Position template for different installation and wiring ways.

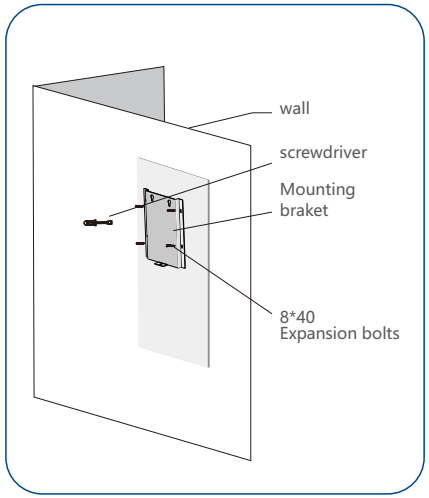

Step 2

Install the Mounting braket

Put the 8*40 flat head screws'anchoring into the holes and use the screw driver make the 4pcs 8*40 flat head screws to fix the Wire box Mounting Template on the wall.

3. Installation Instructions

3.7.1. Step-by-step Installation Instructions (bottom entry wiring)

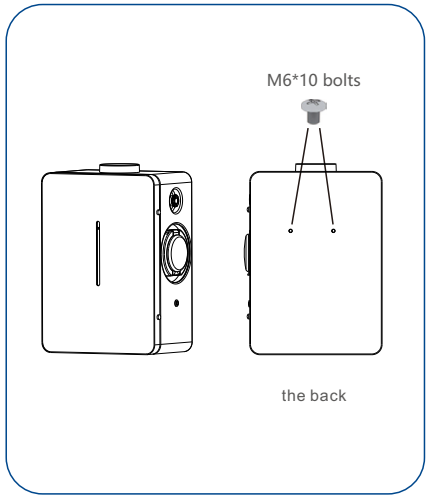

Step 3

Installation of the back screws

Fix 2 screws M6*10 to the back of the EV charger (torque 2.0NM-2.5NM).

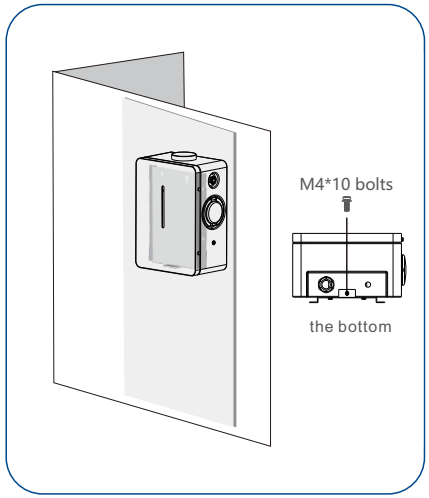

Step 4

Fixing the EV charger

Firstly, fasten the screws on the back of the EV charger to the mounting plate through the holes in the mounting plate. Secondly, fix the bottom side of the EV charger with M4*10 triple combination screws (torque 1.5NM-2.0NM)

3.7.1. Step-by-step installation instructions (bottom entry wiring)

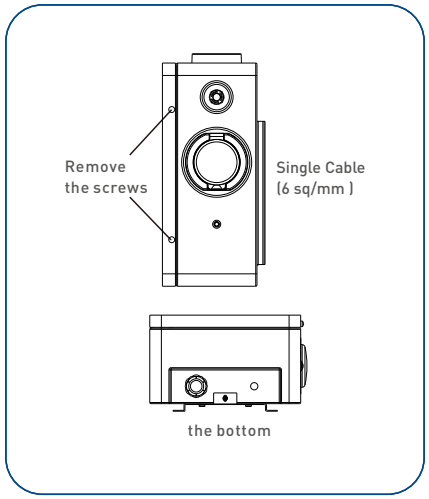

Step 5

Wiring

Note: Consult with your local electrician or refer to your local code for proper wire sizing appropriate for the currents in your EV Charger.

Note: It is the installer's responsibility to identify whether additional grounding is required to ensure that local regulations are met. Grounding must be installed at the power source and not at the cable entry to the EV Charger.

Remove the screws on the side of the EV charger, then open the top casing.
Based on the inner wiring position, install the cable that passes through the waterproof connector on the corresponding terminal.

Note：The torque applied to the screws should be 1.8N-m to 2.2N-m.

3.7.2. External Meter Installation

⚠ Warning

- Do not connect the power cord before reading and fully understanding all the concepts introduced in this section. If you are not sure whether the type of power supply on the repair panel is available, please consult an electrician for assistance.
- Be careful of electric shock! Before use, use a voltmeter to confirm that there is no voltage on the power supply line or terminal to ensure that the power has been cut off.
- Disconnect the power supply at home, and find the neutral wire and the live wire at the entrance to the house.
- According to the wiring figure, the live wire and the neutral wire are respectively connected to the power grid through cables that support a current of more than 32A, so that the connection between the power meter and the power grid is completed.
- According to the wiring figure, connect the live wire and neutral wire to the interfaces be reserved in the charger respectively through the cables that support more than 32A , so that the meter is connected.
- The AB interfaces on the meter needs to be connected to the AB interfaces in the charger PCB Via a cable that supports 485 communication.
- The ground wire of the grid needs to be connected to the ground wire interface which is reserved in charger.
- The meter has been configured to fit the charger by default, please do not change the configuration.
  Please contact us for technology support if you are going to install meters are not from us.